Falcon 4.1.x Rev. 4

Designer : MM, OL, MH
Date : May 2021
Board revision : 4
Board description : BBB cape with EPD Controller and PMIC

Table of contents

Page Number	Page name
1	Front Page
2	Block Diagram
3	Connectors
4	Buffer and measure
5	Low voltage power supply unit
6	High voltage power supply unit TPS651851
7	IT8951E-64 EPD Controller
8	
9	
10	
11	
12	
13	
14	
15	

Revision History

Revision number	Date	Engineer	Description
0	04/2020	CG,MM	Falcon 4.0.0
1	07/2020	CG,MM	initial
2	11/2020	MM, OL	-added Vcom Switch U8 (HVPSU) -changed TPS65185 to TPS651851 (200mA) -changed TPS65185 Voltage from 3V3 to 5V (pin 15,24,40) -changed 3 DIP to 1 DIP switch (SPI,I80)
3	12/2020	MM, OL	-changed removable pcb holder (ears on the edges) -changed J9 USB-C connector to Molex -changed 5V_MAIN track closed to R47 (was open from JLCPCB) -changed (optimised) track width VSNEG, VEE_IN, VDDH_IN -changed LED position
4	05/2021	MM, OL	-changed to 4 Layer PCB -changed, optimised PMIC HVPSU Layout -added ACeP support (Power extension board) -added Software EPDC support

Block Diagram
Falcon_4.1_BlockDiagram_4layer.SchDoc

Falcon 4.1.x

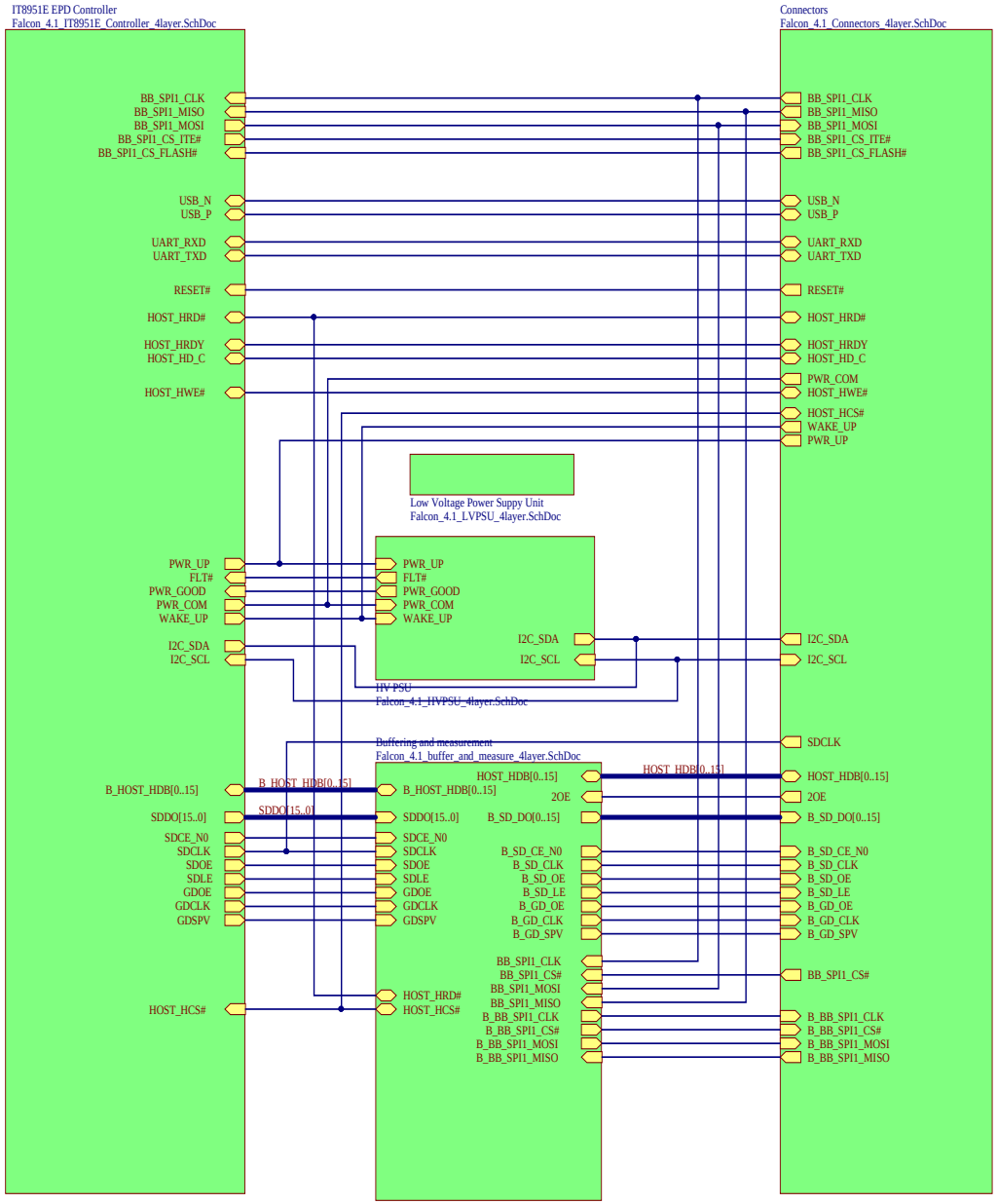

PLASTIC LOGIC
Confidential & Proprietary
Technical Information

PL Germany GmbH
Zwickauer Straße 46
D-01069 Dresden

Title: **Block Diagram**

Revision: P_Revision

Author: MM, OL, MH

Date: May 2021

Sheet: 2 of 7

Product Number: 301033

Sheet Size: A3

Falcon 4.1.x

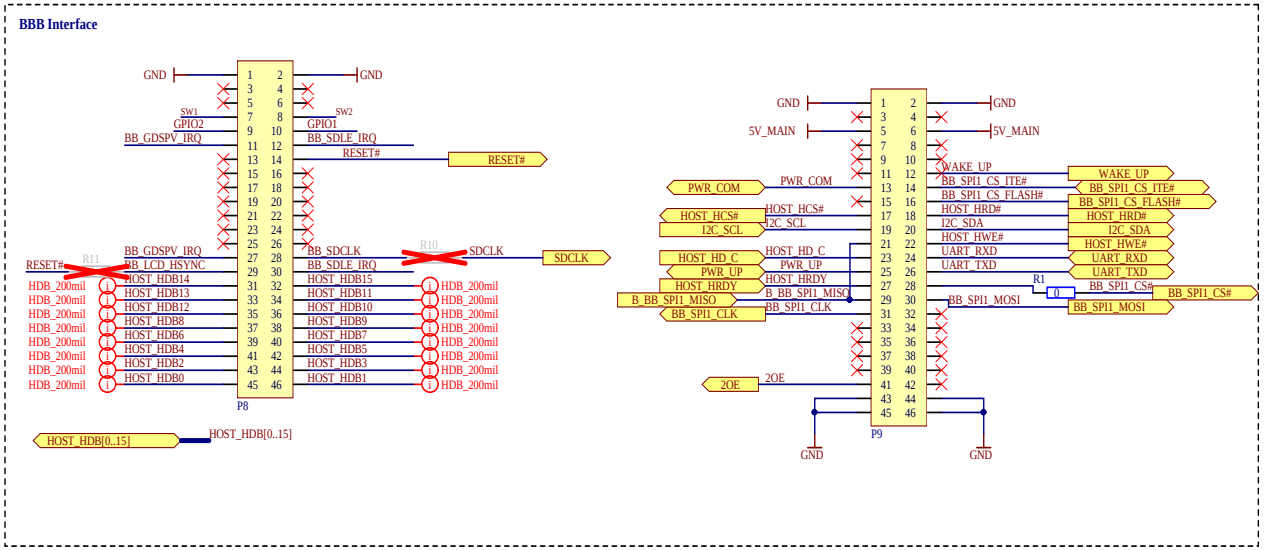

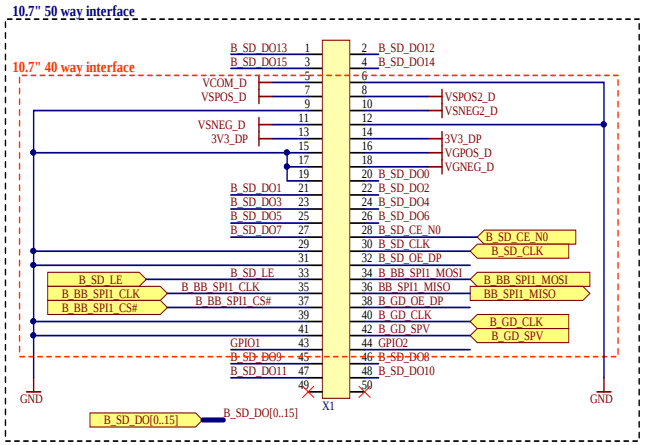

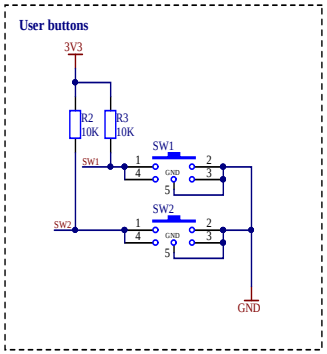

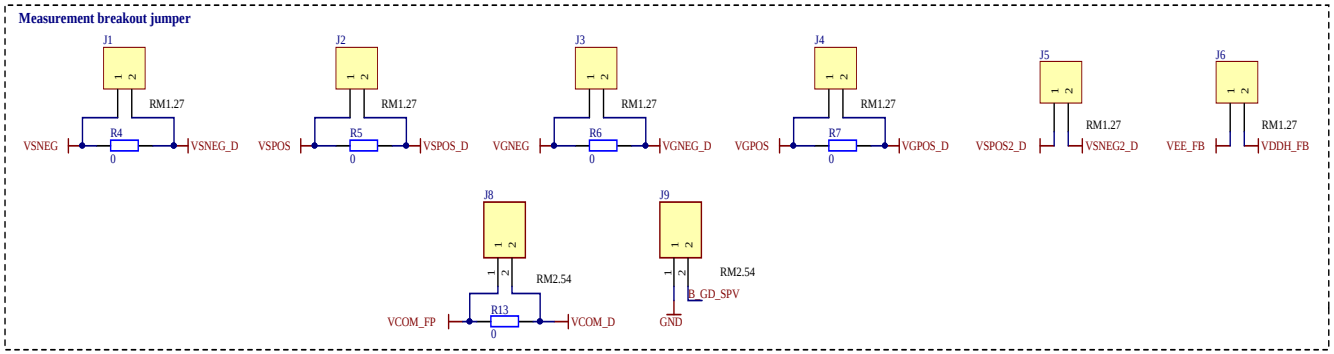

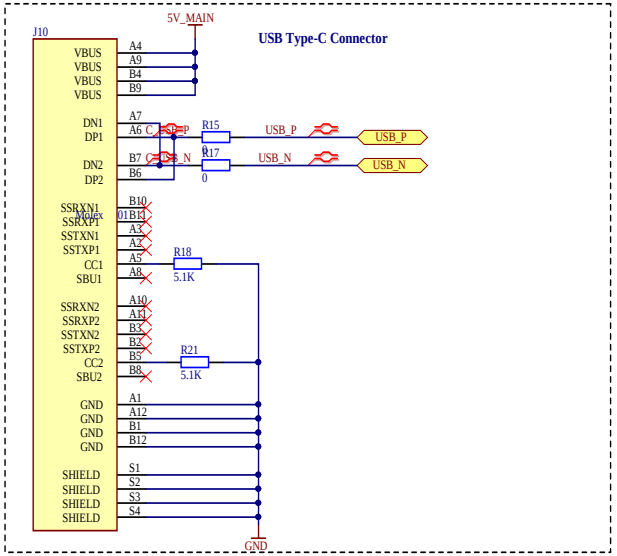

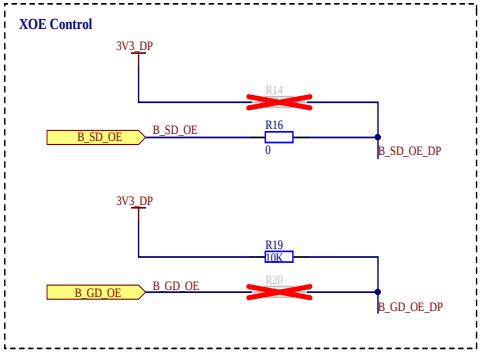

PLASTIC LOGIC Confidential & Proprietary Technical Information	PL Germany GmbH Zwickauer Straße 46 D-01069 Dresden	Title: **Connectors**	Revision: 4
		Author: MM, OL, MH Date: May 2021 Sheet: 3 of 7	Product Number: Sheet Size: A3

Falcon 4.1.x

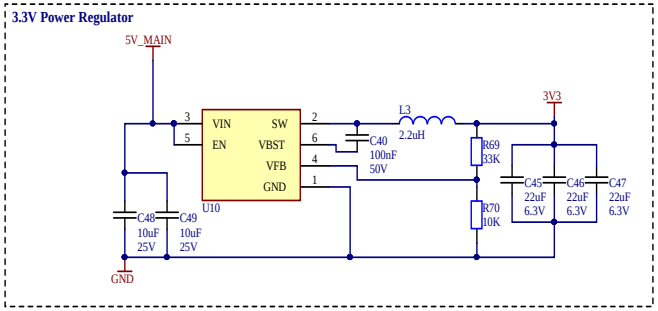

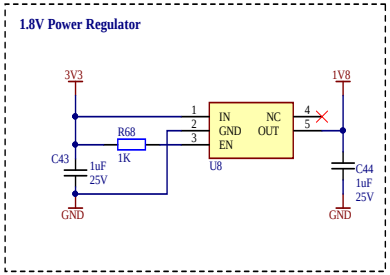

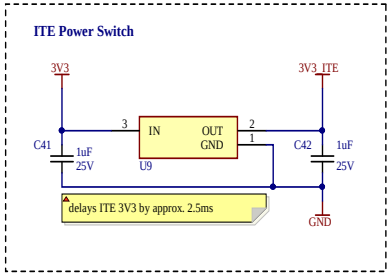

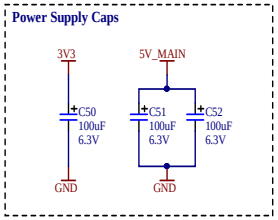

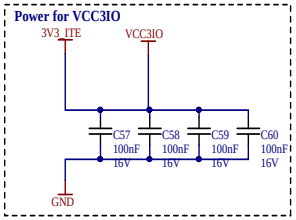

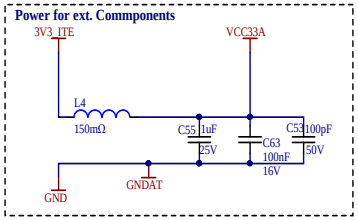

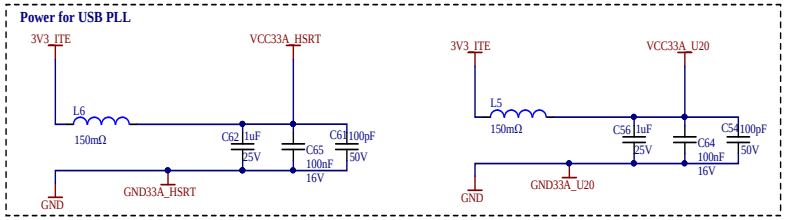

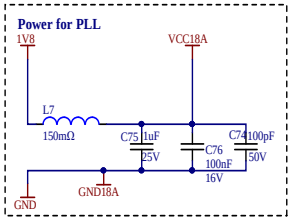

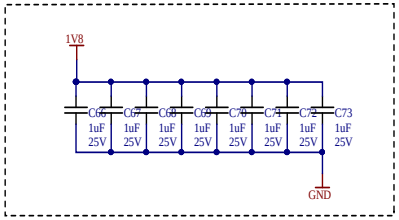

PLASTIC LOGIC Confidential & Proprietary Technical Information	PL Germany GmbH Zwickauer Straße 46 D-01069 Dresden	Title: *Low Voltage Power Supply*	Revision: 4
		Author: MM, OL, MH Date: May 2021 Sheet: 4 of 7	Product Number: Sheet Size: A3

Falcon 4.1.x

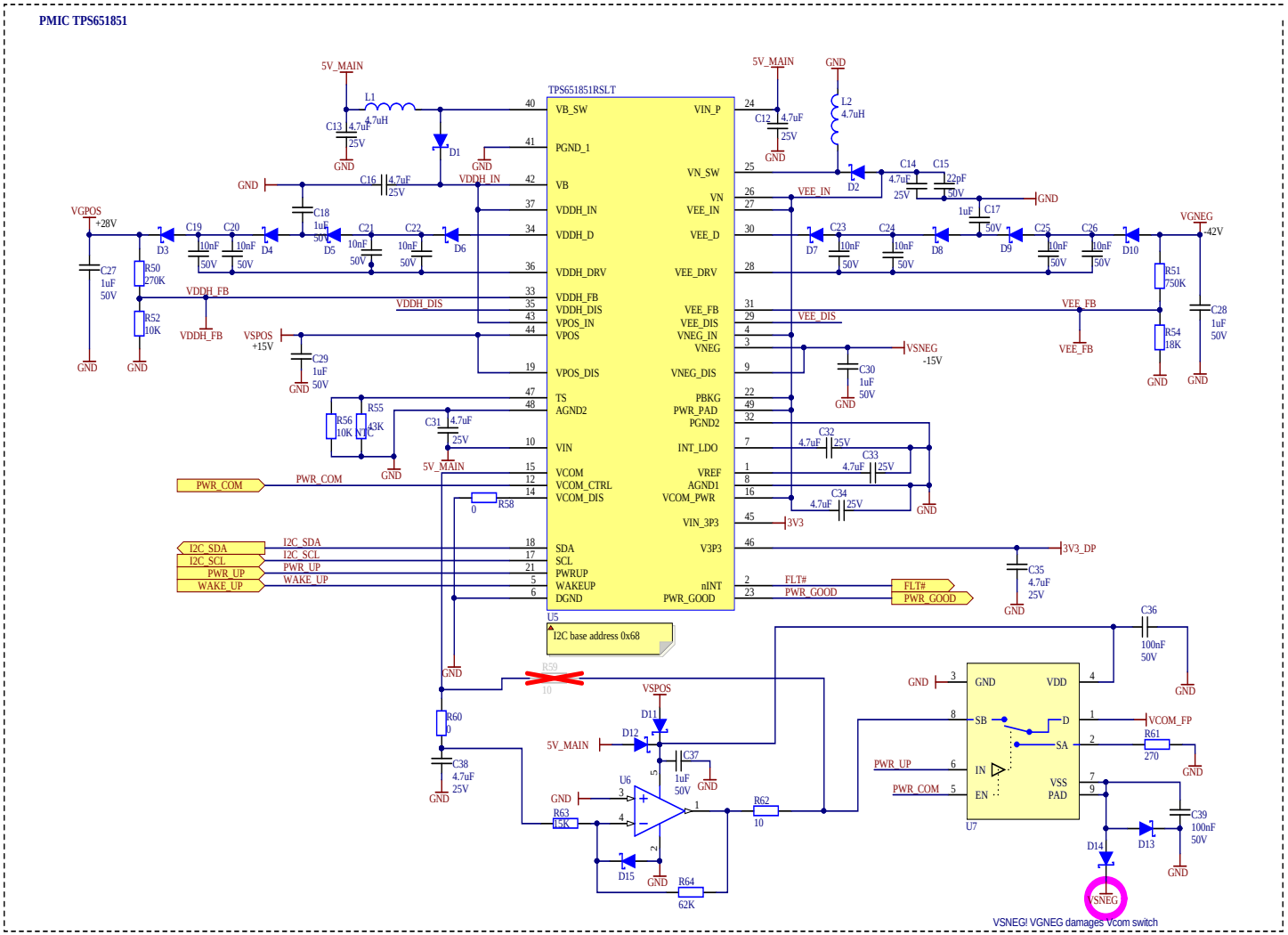

Active Discharge Circuit 1

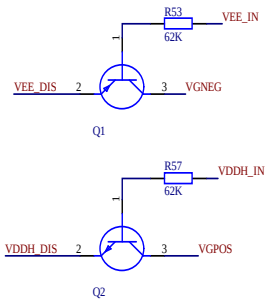

Status LED´s

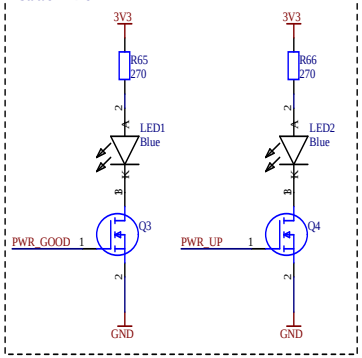

Protection diodes, prevent PMIC latch-up

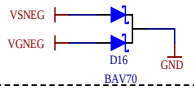

PLASTIC LOGIC Confidential & Proprietary Technical Information	PL Germany GmbH Zwickauer Straße 46 D-01069 Dresden	Title: *HVPSU*	Revision: 4
		Author: MM, OL, MH Date: May 2021 Sheet: 5 of 7	Product Number: Sheet Size: A3

Falcon 4.1.x

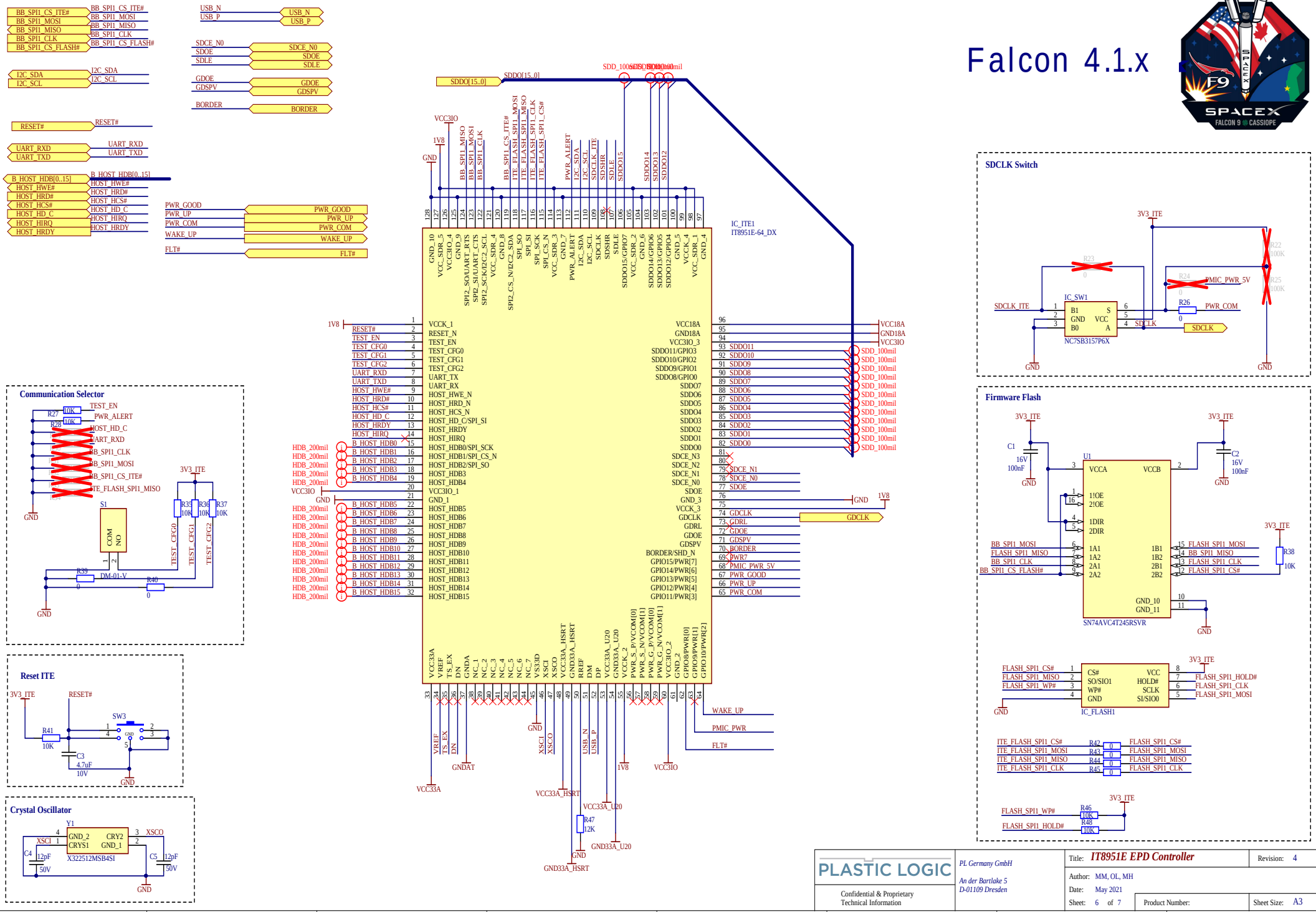
IC_ITE1
IT8951E-64_DX
SDCLK Switch
IC_SW1
NC7SB3157P6X
Firmware Flash
U1
SN74AVC4T245RSVR
IC_FLASH1
Communication Selector
S1
COM
NO
DM-01-V
Reset ITE
SW3
Crystal Oscillator
Y1
X322512MSB4SI
PLASTIC LOGIC
Confidential & Proprietary
Technical Information
PL Germany GmbH
An der Bartlake 5
D-01109 Dresden
Title: IT8951E EPD Controller
Revision: 4
Author: MM, OL, MH
Date: May 2021
Sheet: 6 of 7
Product Number:
Sheet Size: A3

Falcon 4.1.x

Signal buffer and series termination

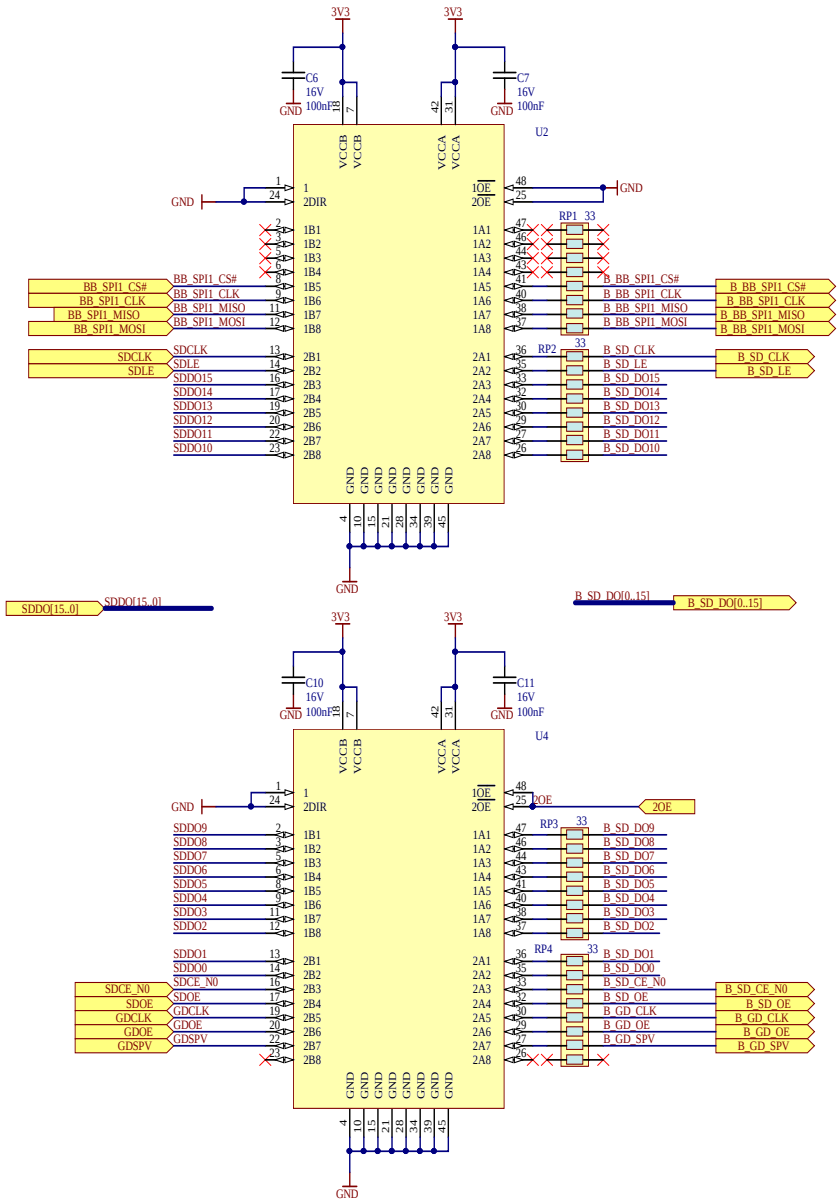

I80 Buffer

Buffer avoids I80 HDB signal interference with BBB startup sequence

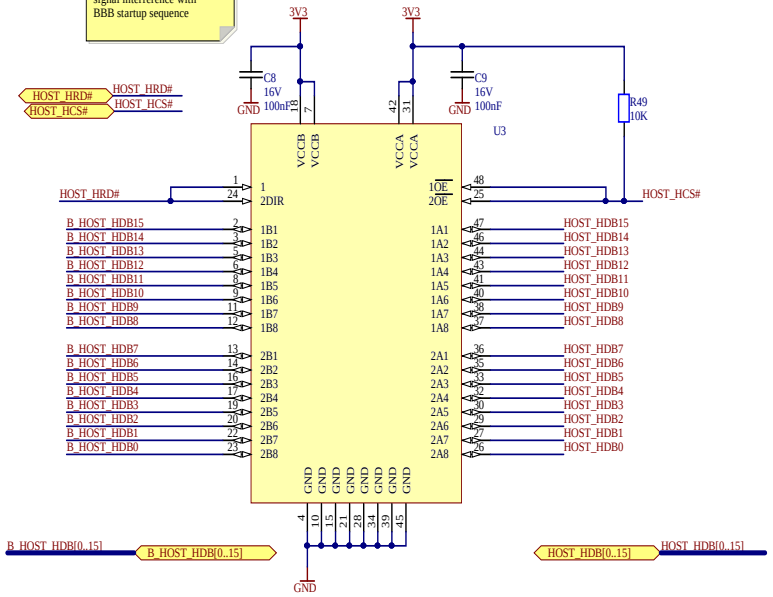

PLASTIC LOGIC Confidential & Proprietary Technical Information	PL Germany GmbH Zwickauer Straße 46 D-01069 Dresden	Title: *Buffer and measure*	Revision: 4
		Author: MM, OL, MH Date: May 2021 Sheet: 8 of 7	Product Number: Sheet Size: A3

Designator
Falcon4.1.x_to_PowerExtension_Switches .SchDoc

Designator
Falcon4.1.x_to_PowerExtension_Connectors.SchDoc

Designator
Falcon4.1.x_to_PowerExtension_Boost_LM3481MM.SchDoc

Designator
Falcon4.1.x_to_PowerExtension_Boost_LM25088MM.SchDoc

PLASTIC LOGIC Confidential & Proprietary Technical Information	*PL Germany GmbH* *Zwickauer Straße 46* *D-01069 Dresden*	Title: *	Revision: *
		Author: * Date: * Sheet: 1 of 5	Product Number: Sheet Size: A3

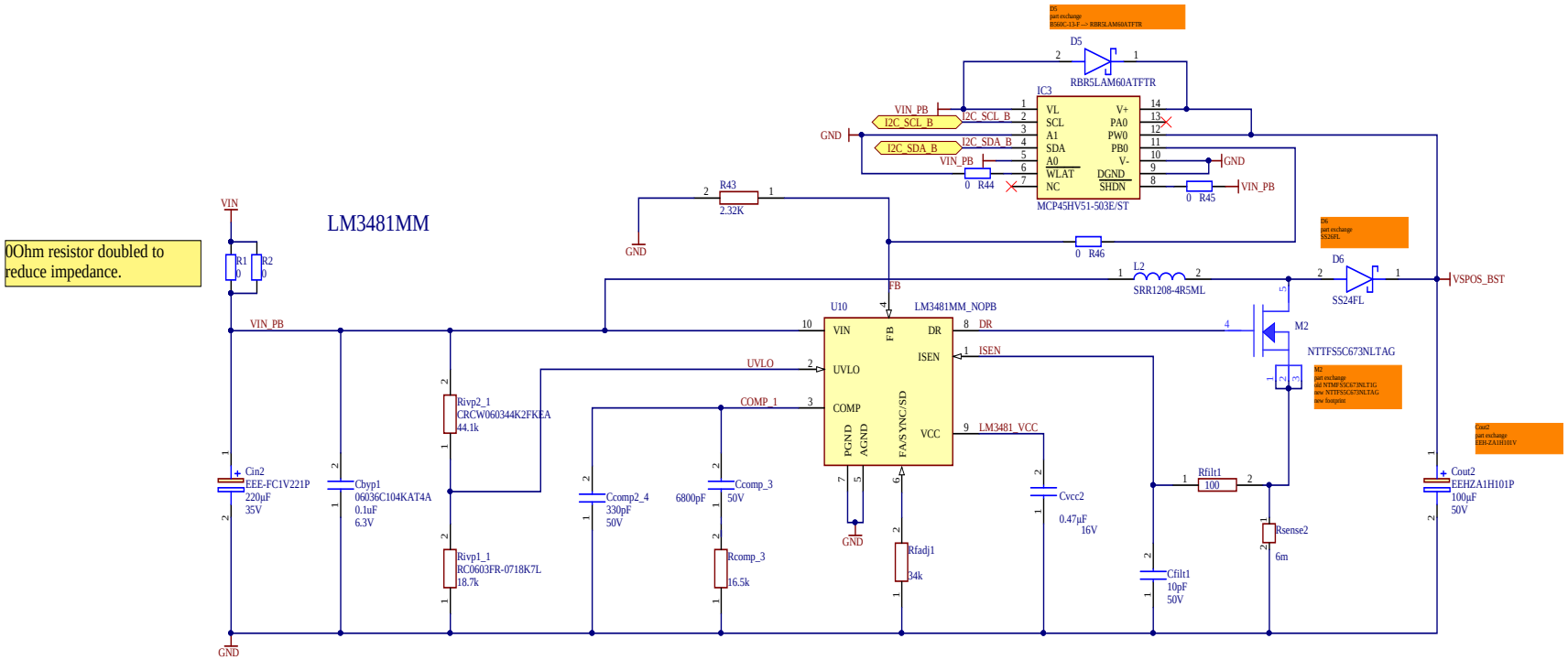

PLASTIC LOGIC Confidential & Proprietary Technical Information	PL Germany GmbH Zwickauer Straße 46 D-01069 Dresden	Title: **Positive Power Booster**	Revision: 0
		Author: MH, MM Date: March 2021 Sheet: 2 of 5	Product Number: P_ProductNumber Sheet Size: A3

LM25088MM

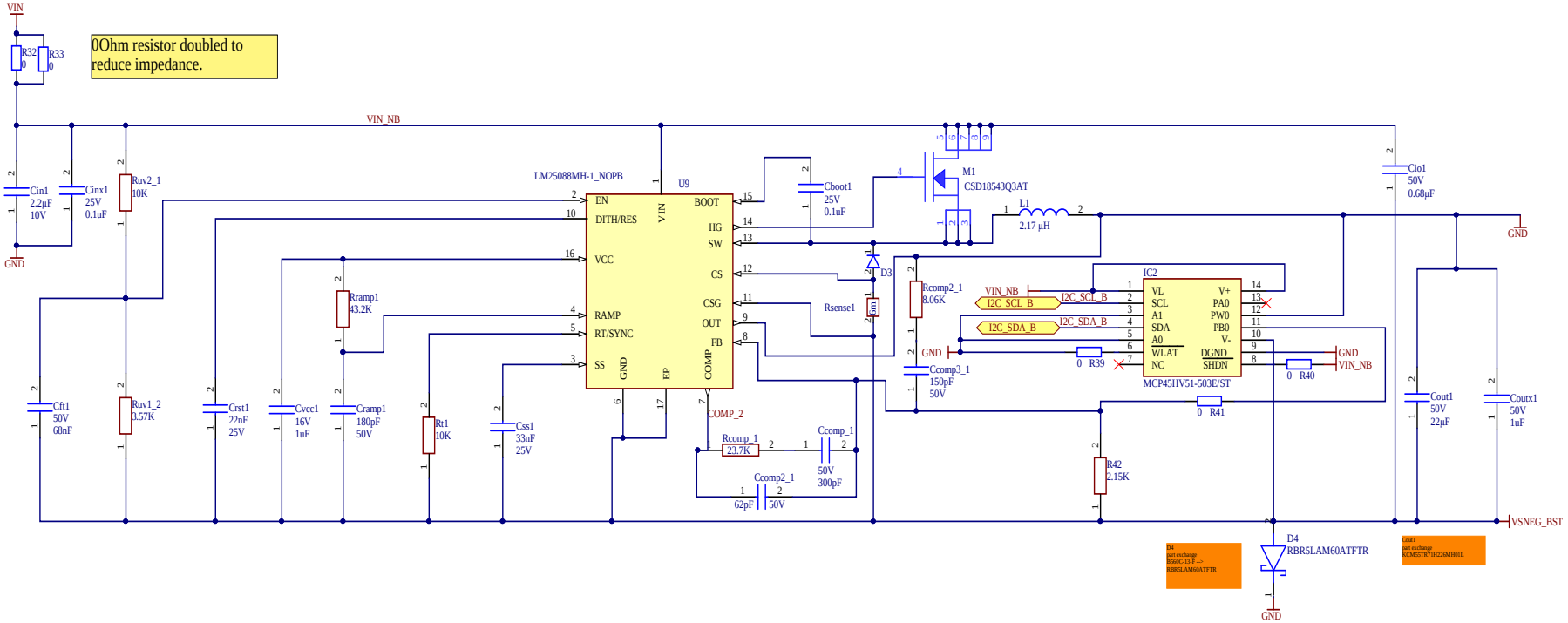

PLASTIC LOGIC Confidential & Proprietary Technical Information	PL Germany GmbH Zwickauer Straße 46 D-01069 Dresden	Title: *Negative Power Booster*	Revision: 0
		Author: MH, MM Date: March 2021 Sheet: 3 of 5	Product Number: / Sheet Size: A3

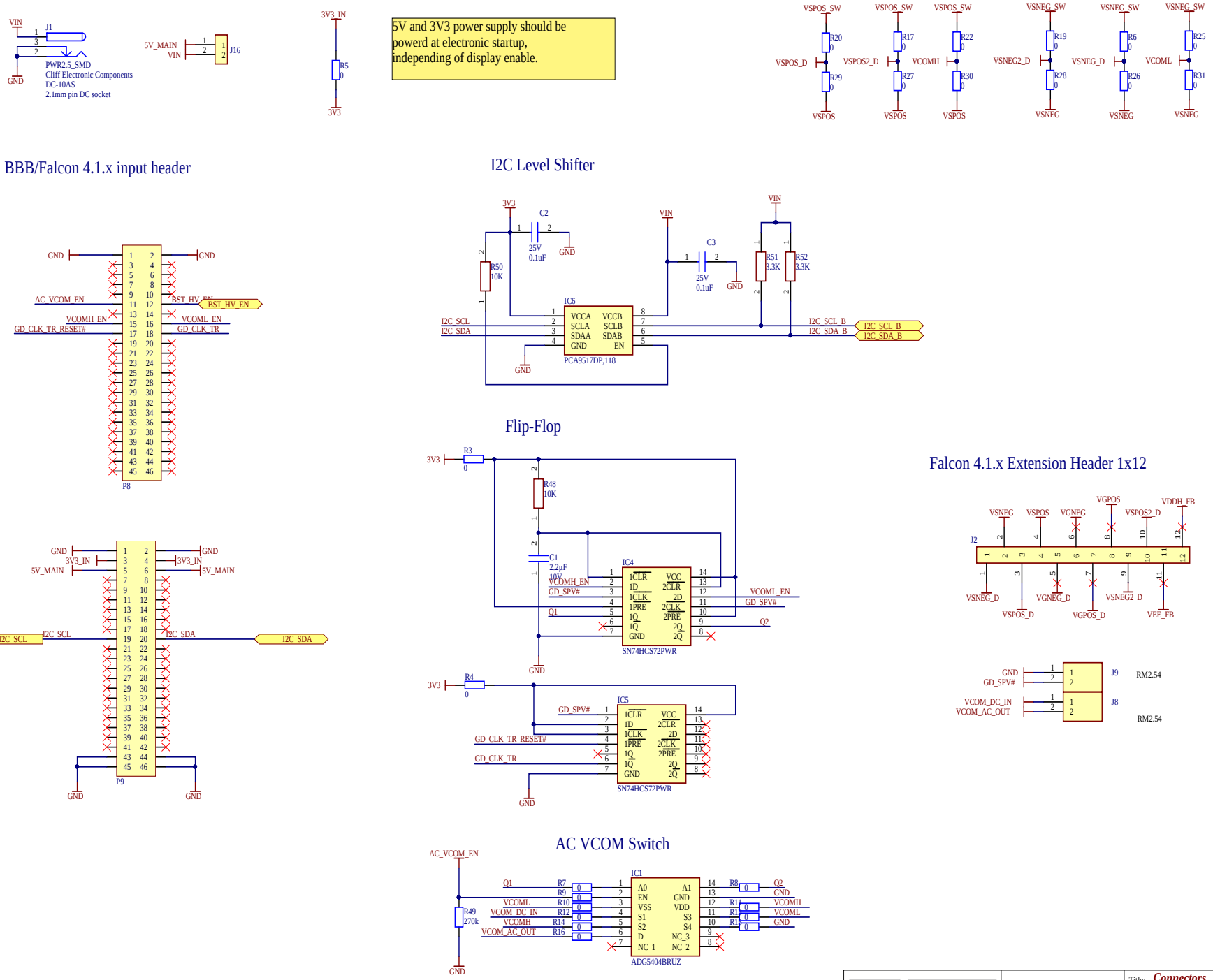
VIN
J1
GND
PWR2.5_SMD
Cliff Electronic Components
DC-10AS
2.1mm pin DC socket
5V_MAIN
VIN
J16
3V3_IN
R5
0
3V3
5V and 3V3 power supply should be powerd at electronic startup, independing of display enable.
VSPOS_SW
R20
0
VSPOS_D
R29
0
VSPOS
VSPOS_SW
R17
0
VSPOS2_D
R27
0
VSPOS
VSPOS_SW
R22
0
VCOMH
R30
0
VSPOS
VSNEG_SW
R19
0
VSNEG2_D
R28
0
VSNEG
VSNEG_SW
R6
0
VSNEG_D
R26
0
VSNEG
VSNEG_SW
R25
0
VCOML
R31
0
VSNEG
BBB/Falcon 4.1.x input header
GND
GND
AC_VCOM_EN
BST_HV_EN
VCOMH_EN
VCOML_EN
GD_CLK_TR_RESET#
GD_CLK_TR
P8
GND
3V3_IN
5V_MAIN
GND
3V3_IN
5V_MAIN
I2C_SCL
I2C_SCL
I2C_SDA
I2C_SDA
P9
GND
GND
I2C Level Shifter
3V3
C2
25V
0.1uF
GND
VIN
C3
25V
0.1uF
GND
VIN
R50
10K
R51
3.3K
R52
3.3K
IC6
VCCA
SCLA
SDAA
GND
VCCB
SCLB
SDAB
EN
PCA9517DP,118
I2C_SCL
I2C_SDA
I2C_SCL_B
I2C_SDA_B
I2C_SCL_B
I2C_SDA_B
GND
Flip-Flop
3V3
R3
0
R48
10K
C1
2.2µF
10V
VCOMH_EN
GD_SPV#
Q1
IC4
1CLR
1D
1CLK
1PRE
1Q
1Q
GND
VCC
2CLR
2D
2CLK
2PRE
2Q
2Q
SN74HCS72PWR
VCOML_EN
GD_SPV#
Q2
GND
3V3
R4
0
IC5
GD_SPV#
GD_CLK_TR_RESET#
GD_CLK_TR
SN74HCS72PWR
GND
Falcon 4.1.x Extension Header 1x12
VSNEG
VSPOS
VGNEG
VGPOS
VSPOS2_D
VDDH_FB
J2
VSNEG_D
VSPOS_D
VGNEG_D
VGPOS_D
VSNEG2_D
VEE_FB
GND
GD_SPV#
J9
RM2.54
VCOM_DC_IN
VCOM_AC_OUT
J8
RM2.54
AC VCOM Switch
AC_VCOM_EN
R49
270k
GND
Q1
VCOML
VCOM_DC_IN
VCOMH
VCOM_AC_OUT
R7
R9
R10
R12
R14
R16
IC1
A0
EN
VSS
S1
S2
D
NC_1
A1
GND
VDD
S3
S4
NC_3
NC_2
ADG5404BRUZ
R8
R11
R13
Q2
GND
VCOMH
VCOML
GND
PLASTIC LOGIC
Confidential & Proprietary
Technical Information
PL Germany GmbH
Zwickauer Straße 46
D-01069 Dresden
Title: Connectors
Revision: 0
Author: MH, MM
Date: March 2021
Sheet: 4 of 5
Product Number: P_ProductNumber
Sheet Size: A3

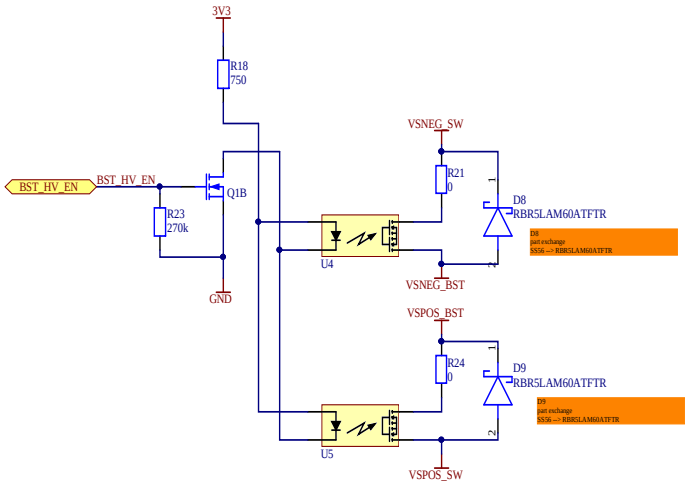

PLASTIC LOGIC

Confidential & Proprietary
Technical Information

PL Germany GmbH

Zwickauer Straße 46
D-01069 Dresden

Title: ***HV Switch/Discharge***

Revision: **0**

Author: MH, MM

Date: March 2021

Sheet: 5 of 5

Product Number:

Sheet Size: A3

Sojus 5.2 Main Board

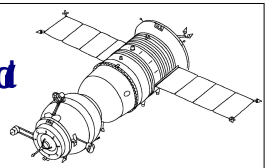

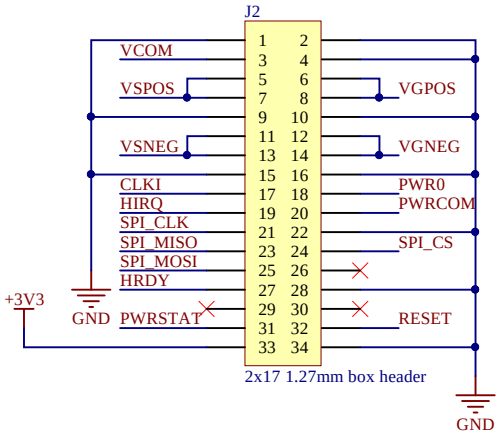

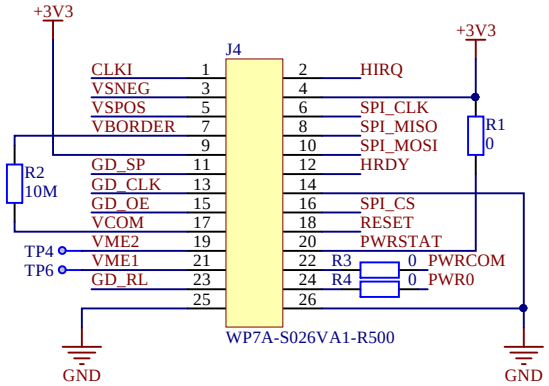

Testpoints

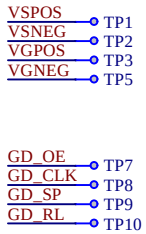

Hummingbird Z6 Connector

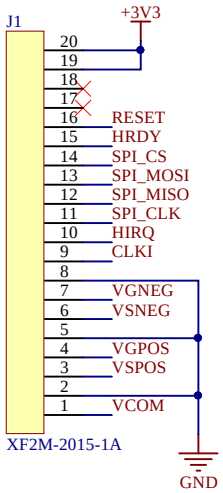

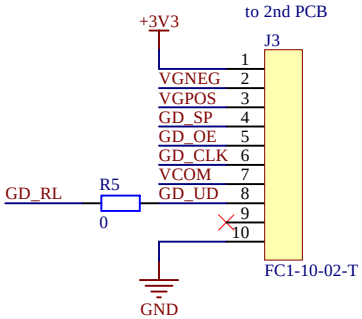

Cannot open file \\plhpnas002\technical\product\Template	*Plastic Logic GmbH*	Title: ***Sojus 5.2 Main Board***	Revision: 0
	An der Bartlake 5 *D-01109 Dresden*	Author: MJ	
Confidential & Proprietary Technical Information		Date: April 2016	
		Sheet: 1 of 1 — Document Number:	Sheet Size: A4

Sojus 5.2 Secondary Board

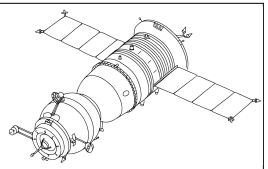

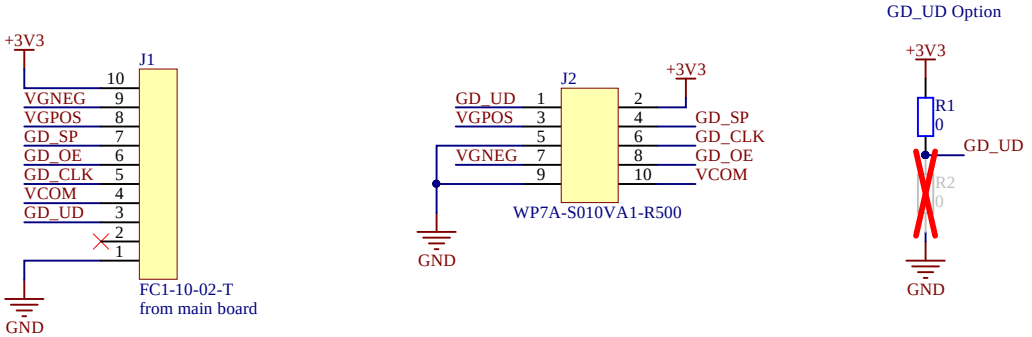

PLASTIC LOGIC Confidential & Proprietary Technical Information	*Plastic Logic GmbH* *An der Bartlake 5* *D-01109 Dresden*	Title: ***Sojus 5.2 Secondary Board***	Revision: 0
		Author: MJ Date: April 2016 Sheet: 1 of 1	Document Number: / Sheet Size: A4